Professional Engineers Registration Examination

FUNDAMENTALS *of* Engineering Examination 2014

Information for Applicants

professional engineers board Singapore
5 Maxwell Road 1st storey Tower Block MND Complex Singapore 069110

Professional Engineers Registration Examination
Fundamentals of Engineering Examination 2014

Information for Applicants

Content Page

1 Introduction 2
2 Eligibility To Sit For Examination.....2
3 Fees 2
4 Dates Of Examination.....3
5 Venue 3
6 Application 3
7 Structure Of Examination.....3
8 Final Results and Notification..... 4
9 Examination Appeals.....4
10 Review Courses 4
11 Refund Of Fees.....4

Annex A: FORMAT AND SYLLABUS, READING LISTS AND QUESTIONS FROM PAST YEAR PAPERS

I Fundamentals Of Engineering Examination (Civil).....5
Recommended Reading List (Civil)
Questions From Past Year Papers (Civil)

II Fundamentals Of Engineering Examination (Electrical).....20
Recommended Reading List (Electrical)
Questions From Past Year Papers (Electrical)

III Fundamentals Of Engineering Examination (Mechanical).....30
Questions From Past Year Papers (Mechanical)

Professional Engineers Registration Examination
Fundamentals of Engineering Examination 2014
Information for Applicants

1 INTRODUCTION

The mission of the Professional Engineers Board is to safeguard life, property, and welfare of the public by setting and maintaining high standards for registering professional engineers and by regulating and advancing the practice of professional engineering.

The Professional Engineers Board registers professional engineers in the branches of civil, electrical and mechanical engineering. A person applying for registration as a professional engineer to the Professional Engineers Board is required to hold an approved degree or qualification listed in the Professional Engineers (Approved Qualifications) Notification and acquired not less than 4 years of relevant practical experience. He is also required to sit and pass examinations prescribed by the Board. The applicant is required to sit and pass the Fundamentals of Engineering Examination and following that, to sit and pass the Practice of Professional Engineering Examination. In addition, the applicant is required to attend an interview.

The following sections set out the requirements and details for the Fundamentals of Engineering Examination 2014 while details on other application requirements are available on the PEB website at www.peb.gov.sg.

2 ELIGIBILITY TO SIT FOR EXAMINATION

The Fundamentals of Engineering Examination tests an applicant's knowledge of fundamental engineering subjects in civil, electrical or mechanical engineering. A person may apply to sit for the Fundamentals of Engineering Examination after he has obtained an approved degree or qualification listed in the Professional Engineers (Approved Qualifications) Notification or has proper and recognised academic qualifications in engineering accepted by the Board.

3 FEES

The fees for an application to sit for the Fundamentals of Engineering Examination is $350.

4 DATES OF EXAMINATION

The dates for the Fundamentals of Engineering Examination 2014 are:

a) Civil Engineering – 1 October 2014
b) Electrical Engineering – 2 October 2014
c) Mechanical Engineering – 2 October 2014

5 VENUE

Details of the venue would be given to successful applicants at a later date.

6 APPLICATION

Application and payment shall be made online at PEB website (http://www.peb.gov.sg) no later than 30 June 2014, and required documents are to be submitted to PEB within a week after online application. Applicants are advised to send in their applications early to allow time for processing. They would be informed of the status of their applications and other details by post at least two weeks before the examinations.

7 STRUCTURE OF EXAMINATION

A summary of the structure of the Fundamentals of Engineering Examination is shown in the table below. The examination is 'open book' and further details are given in **Annex A: Format and Syllabus, Reading Lists and Questions From Past Year Papers.**

Subjects	Time Allocated	Format
FEE Part 1 Core engineering subjects in civil/mechanical/electrical engineering	*3 hours & 10 mins (9.00 am – 12.10 pm)	• 40 Multiple Choice Questions (MCQ)
FEE Part 2 Core/Elective subjects in civil/electrical/mechanical engineering	*3 hours & 10 minutes (2.00 pm – 5.10 pm)	• Answer 5 out of 9 questions (civil) • Answer 5 out of 7 questions (electrical, mechanical)

* includes 10 minutes for reading the exam questions, etc

8 FINAL RESULTS AND NOTIFICATION

Examination results will be given to candidates on a Pass/Fail basis. No examination scores or marks will be given to candidates. Examination results will be mailed to the candidates within twelve weeks after the examination.

9 EXAMINATION APPEALS

A candidate who has failed the examination may submit a written appeal to review his/her performance together with a payment of $25. The appeal is to be made within 2 weeks after the receipt of results and late appeals would not be considered. The result of the appeal/review will be sent by written mail to the appeal candidate. The appeal candidate would not be allowed to review his examination paper.

10 REVIEW COURSES

The Board does not endorse any review courses or materials provided as study aides.

11 REFUND OF FEES

Where an applicant who has been accepted is unable to sit for the examination subsequently, the Board may, at its discretion, refund $100 to the applicant if the applicant informs the Board at least a week before the examination or submit an original medical certificate by mail within 2 weeks after the examination. Scanned copy of medical certificates submitted via email will not be accepted. There will be no refund if the applicant informs the Board less than a week before the examination.

Annex A: FORMAT AND SYLLABUS, READING LISTS AND QUESTIONS FROM PAST YEAR PAPERS

I Fundamentals Of Engineering Examination (Civil)

The examination will focus on testing the fundamentals of civil engineering. The 6-hour examination will comprise two parts. Part 1 catering for breadth, will comprise questions on core civil engineering subjects, typical of courses covered during the 1st and 2nd year of a 4-year civil engineering undergraduate course. Part 2 catering for depth, will comprise more core and elective civil engineering courses covered during the 3rd and 4th year of a 4-year civil engineering undergraduate course.

Format

- **FEE Part 1 (Civil) (3 hours & 10 mins) – 40 MCQ questions**
  - CE 101 Mechanics of Materials
  - CE 102 Structural Mechanics
  - CE 103 Structural Analysis
  - CE 104 Soil Mechanics
  - CE 105 Fluid Mechanics

- **FEE Part 2 (Civil) (3 hours & 10 mins) – 5 out of 9 questions**
  - CE 201 Reinforced and Prestressed Concrete Structures (2 Qs)
  - CE 202 Steel and Composite Structures (2 Qs)
  - CE 203 Geotechnical Engineering (2 Qs)
  - CE 204 Transportation (1 Q)
  - CE 205 Hydraulics and Hydrology (1 Q)
  - CE 206 Environmental Engineering (1 Q)

Syllabus

- **CE 101 Mechanics of Materials**
  - **Mechanics of Materials**
    Strength, stiffness and deformability; Stress-strain relations; ductility and brittle fracture; time-dependent properties; creep, creep rupture; relaxation; cyclic load behaviour.
  - **Concrete Technology**
    Concrete-making materials, properties of fresh and hardened concrete, mixing, placing, and curing, mix design, destructive and non-destructive tests, quality control, durability, and special concrete.

- **Steel**
  Basic metallurgy, mechanical properties and applications, welding technology and corrosion.

- **CE 102 Structural Mechanics**

  - **Structural Mechanics**
    Statics and kinetics of particles, equilibrium of rigid bodies, kinematics and plane motion of rigid bodies, analysis of simple trusses and beams, analysis of structural members subjected to tension, compression, torsion, and bending, including such fundamental concepts as stress, strain, and elastic behaviour. Bar forces in compound and complex trusses. Bending moment, shear and axial forces of beams and frames.

- **CE 103 Structural Analysis**

  - **Structural Analysis**
    Displacements of elastic determinate structures: principle of virtual work and energy theorems. Analysis of indeterminate structures. Deformation of indeterminate structures and influence line method. Displacement techniques using slope-deflection and moment distribution methods. Plastic theory and analysis. Theory and applications of modern structural analysis. Concepts of equilibrium, compatibility and force-displacement relationships. Direct stiffness method. Matrix formulation of trusses, beams and frames. Stability concepts and elastic stability analysis of framed structures.

- **CE 104 Soil Mechanics**

  - Basic geology, unified soil classification system, mechanical properties, effective stress principle, shear strength, compressibility, and seepage and consolidation; Mohr-Coulomb failure criterion (drained and undrained), settlement calculations, rate of consolidation using classical Terzaghi theory.

- **CE 105 Fluid Mechanics**

  - **Fluid Statics**
    Fluid properties; hydrostatic pressure and thrust; buoyancy; stability of floating bodies.

  - **Fluid Motion**
    Continuity equations; Bernoulli's equation; linear momentum equation.

- **Similitude**
  Dimensional analysis; design of hydraulic models.

- **CE 201 Reinforced and Prestressed Concrete Structures**

  - **RC Design**
    Basic structural members and structural systems. Loads and load effects. Section analysis and design for bending. Design for shear, torsion and bond. Corbels. Serviceability and durability requirements. Design of short and slender columns. Design of slab systems. Concentrated loads on slabs. Design of foundations. Retaining walls. Reinforced concrete detailing.

  - **Prestressed Concrete Design**
    Basic concepts of prestressing. Materials and prestressing systems. Prestressed losses and time dependent deformation. Behaviour and design of members subject to flexure, shear and combined axial and bending action.

- **CE 202 Steel and Composite Structures**

  - **Steel Design**
    Limit state design. Material properties and structural responses. Local buckling and section classifications. Design of fully restrained beams. Shear buckling and design of plate girder. Web bearing and buckling. Design of web stiffeners. Lateral-torsional buckling and design of laterally unrestrained beams. Tension and compression members. Axially loaded members with end moments. Design of steel connections. Plastic design of portal frames. Continuous multi-storey frames.

  - **Composite (Steel-Concrete) Design**
    Structural modeling and design concepts. Moment capacity and shear resistance, full and partial connection of composite beams. Design of composite slab. Design of composite columns.

- **CE 203 Geotechnical Engineering**

  - **Slope Stability and Earth Retaining Structures**
    Introduction to slope stability and earth retaining structures; slopes and embankments; earth pressure and retaining structures; deep excavations; calculation of active and passive earth pressures; design considerations pertaining to deep excavations.

- **Foundation Engineering**
  Site investigation and interpretation of soil reports; shallow foundations and deep foundations; selection of appropriate foundation type; capacity and settlement requirements.

- **CE 204 Transportation**

  - **Transportation Engineering**
    Transportation systems, planning and management; geometric design of roads and intersections; design of flexible and rigid pavements.

  - **Traffic Engineering**
    Traffic flow studies; traffic data analysis; traffic management; highway and intersection capacity; traffic signal control. Parking.

- **CE 205 Hydraulics and Hydrology**

  - **Hydraulics**
    Friction and minor losses in pipe flow; pipe and pump systems; pipe network analysis; open channel flow; uniform flow, Manning's equation; critical flow; energy and momentum principles; hydraulic jumps; gradually varied flows, backwater computation.

  - **Hydrology**
    Processes in the hydrologic cycle: basic meteorology, rainfall precipitation, evaporation and transpiration, infiltration, sub-surface flow, surface runoff, streamflow measurement and hydrograph analysis; unit hydrograph principles and applications; frequency analysis of rainfall or flood data; reservoir and channel flood routing; urban storm drainage design, flood peak estimation.

- **CE 206 Environmental Engineering**

  - **Environmental Engineering**
    Basic physical, chemical and biological water quality parameters; physical, chemical, and biological processes for water and wastewater treatment; water treatment principles and design; water distribution systems; wastewater collection and pumping systems; wastewater treatment design; pretreatment, primary, secondary, tertiary treatment, and anaerobic digestion.

Recommended Reading List for Civil Engineering

FEE Part 1 (Civil)

CE101 Mechanics of Materials

1) W. D. Callister, Jr, "Materials Science and Engineering: An Introduction", John Wiley 1999, 5th Edition. (or equivalent)

CE102 Structural Mechanics

1) Fundamentals of Structural Analysis, 2nd Edition (2002), H.H. West and L.F. Geshwinder, John Wiley & Sons, Inc.

CE103 Structural Analysis

1) Fundamentals of Structural Analysis, 2nd Edition (2002), H.H. West and L.F. Geshwinder, John Wiley & Sons, Inc.

CE104 Soil Mechanics

1) Soil Mechanics, R F Craig, 7th Edition, Taylor & Francis Inc.

CE105 Fluid Mechanics

1) Fluid Mechanics with Engineering Applications, EJ Finnemore and JB Franzini, 10th Edition, Int Edition McGraw Hill, 2002.

FEE Part 2 (Civil)

CE201 Reinforced and Pre-stressed Concrete Structures

1) Reinforced and Prestressed Concrete. 3rd Edition (1987), Kong FK and Evans RH, Van Nostrand Reinhold UK.

CE202 Steel and Composite Structures

1) Structural Steelwork Design to Limit State Theory, 3rd Edition (2004), Lam D, Ang TC and Chiew SP, Elsevier Butterworth-Heinemann, Oxford.

2) Composite Structures of Steel and Concrete, Vol. I – Beams, Slabs, Columns and Frames for Buildings, 2nd Edition (1994), Johnson RP, Blackwell Scientific Publications, Oxford.

CE203 Geotechnical Engineering

1) Foundation Design and Construction, M J Tomlinson, 7th Edition, Prentice-Hall.

2) Soil Mechanics, R F Craig, 7th Edition, Taylor & Francis Inc.

CE204 Transportation

1) Introduction to Transportation Engineering, Banks, J.H., 2nd ed., McGraw-Hill, 2002.

CE205 Hydraulics and Hydrology

1) Hydrology For Engineers, Linsley, RK; Kohler, MA and Paulhus, JLH, SI edition, McGraw-Hill Book Co, Singapore, 1988.

2) Fluid Mechanics with Engineering Applications, EJ Finnemore and JB Franzini, 10th Edition, Int Edition McGraw Hill, 2002.

CE206 Environmental Engineering

1) Water Supply and Pollution Control, Viessman and Hammer, 7th ed., Pearson Prentice Hall, 2004.

Questions From Past Year Papers for Fundamentals Of Engineering Examination Part 1 (Civil)

(Actual paper comprises 40 Multiple Choice Questions (MCQ) of 2.5 marks each. Answer all questions.)

1. A steel bar comprises three sections of three cross sections as shown in Fig. Q1. The diameters of parts AB, BC and CD are 25 mm, 15 mm and 35 mm respectively. The bar is subjected to an axial tensile force of 5 kN. If Young's modulus of steel is 200 kN/mm^2, and the elongations of the three sections of the bars are Δ_1, Δ_2 and Δ_3 respectively, calculate the ratio of the largest to the smallest of these three elongations.

   (a) 1.96
   (b) 2.33
   (c) 5.44
   (d) 2.77

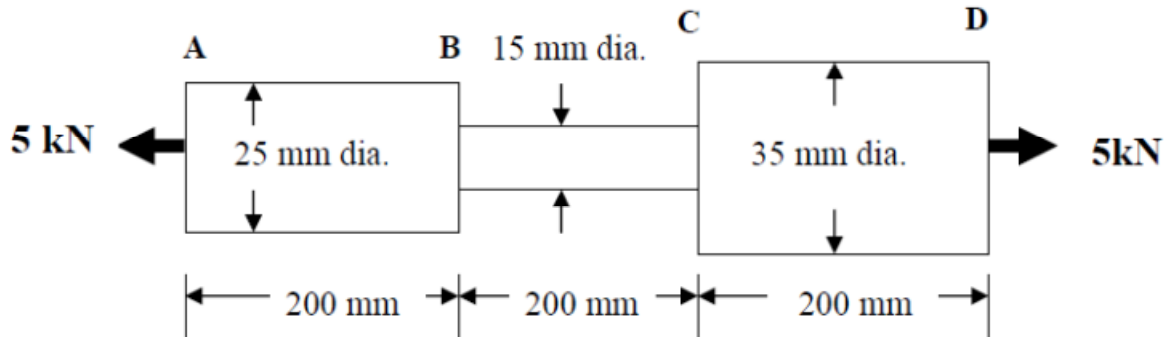

Fig.Q1

2. Three plane trusses are shown in Fig.Q2. The statical determinacy of the trusses, (1), (2) and (3) are respectively:
   (a) determinate, indeterminate, unstable
   (b) determinate, determinate, unstable
   (c) determinate, indeterminate, determinate
   (d) indeterminate, indeterminate, determinate

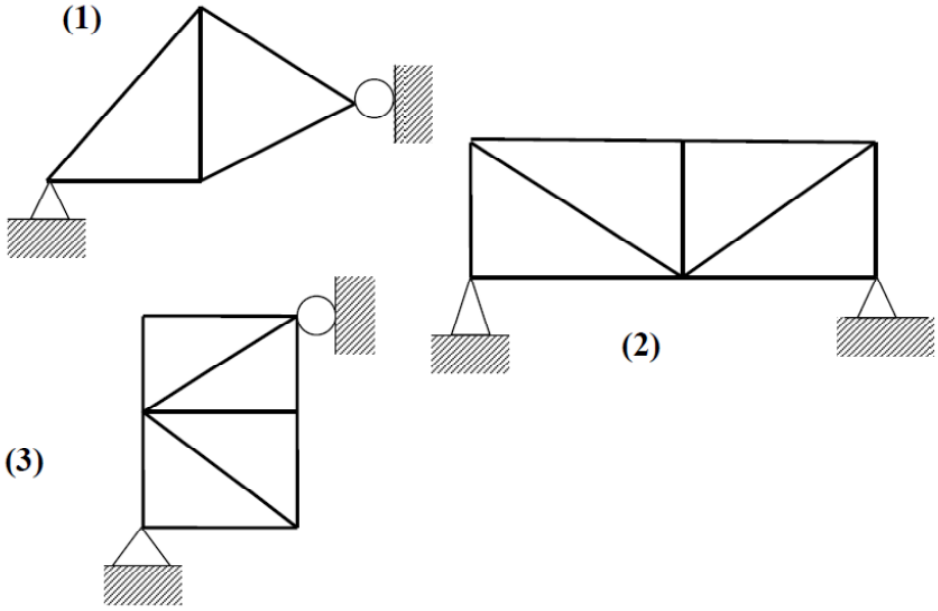

Fig.Q2

3. The static indeterminacy of the beams, (1), (2), (3) and (4) shown in Fig.Q3 are respectively:

   (a) 1, 4, 5, 1
   (b) 2, 4, 5, 2
   (c) 1, 4, 5, 2
   (d) 1, 5, 4, 1

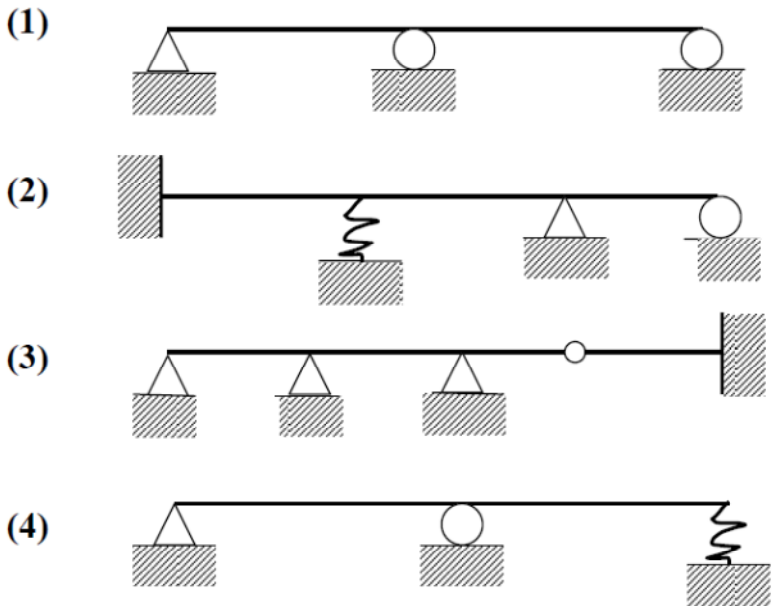

Fig.Q3

4. A reinforced concrete column shown in Fig.Q4 supports a load of 10 kN. The load is shared between the steel reinforcement and the concrete. The cross-sectional areas and Young's moduli are:
   A_c = 1 x 10^4 mm^2 and E_c = 20 kN/mm^2
   A_s = 200 mm^2 and E_s = 210 kN/mm^2

   What is the force carried by the steel reinforcement?
   (a) 1.96 kN
   (b) 2.74 kN
   (c) 2.96 kN
   (d) 1.74 kN

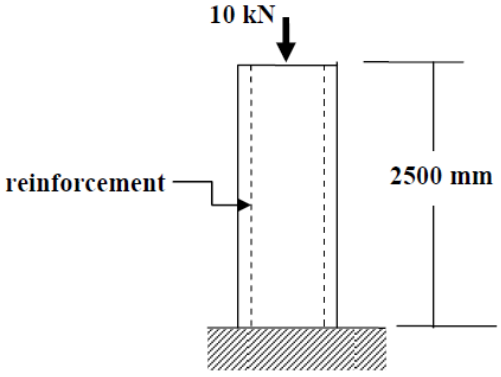

Fig.Q4

5. If seawater is used in place of potable water to cast OPC concrete, the effect is to
   1. increase its strength;
   2. reduce its strength;
   3. retard setting;
   4. decrease its durability.

   Of the above,
   (a) 1 and 3 are correct
   (b) 2 and 3 are correct
   (c) 2 and 4 are correct
   (d) 1 and 4 are correct

6. Find the position at which the maximum upward deflection for this beam with an overhang as shown in Fig.Q6 occurs.

   (a) L/4 from A
   (b) L/√3 from A
   (c) L/2 from A
   (d) 2L/√3 from A

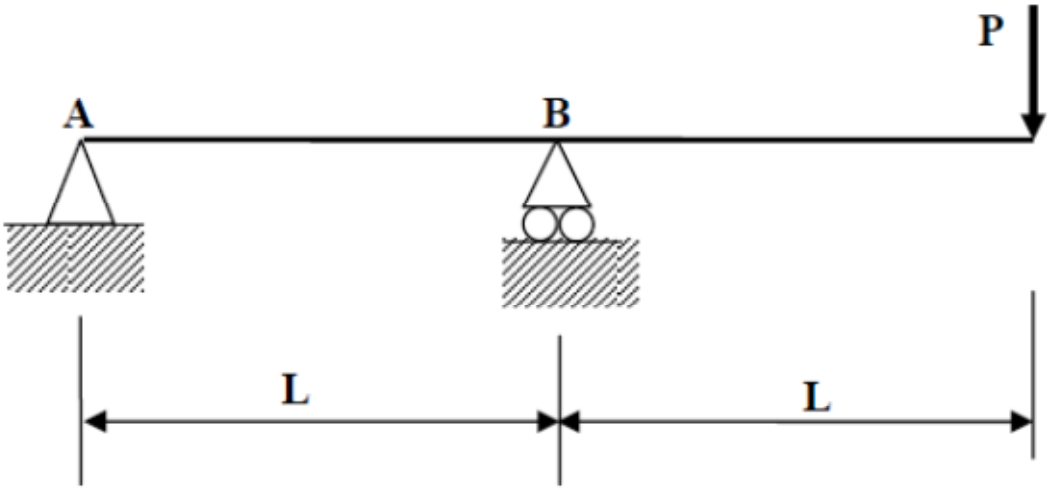

Fig.Q6

7. A river is 3m deep and the river bed consists of a thick deposit of clay with a saturated unit weight of 20kN/m^3. What is the effective stress of the clay layer at a depth of 3m below the river bed level?

   (a) 30 kN/m^2
   (b) 60 kN/m^2
   (c) 90 kN/m^2
   (d) 120 kN/m^2

8. During the site investigation for a deep foundation design, you discover in the borehole a layer of soft clay 5m deep where you had expected a hard stratum at the estimated depth of pile toe. Which of the following action would you take?

   (a) Bore an extra 5m deeper than the original plan
   (b) Stop boring and move to the next borehole location
   (c) Continue boring until stronger soil is found
   (d) Abandon the site

9. In the figure below, what is the gauge pressure of air inside the closed container?

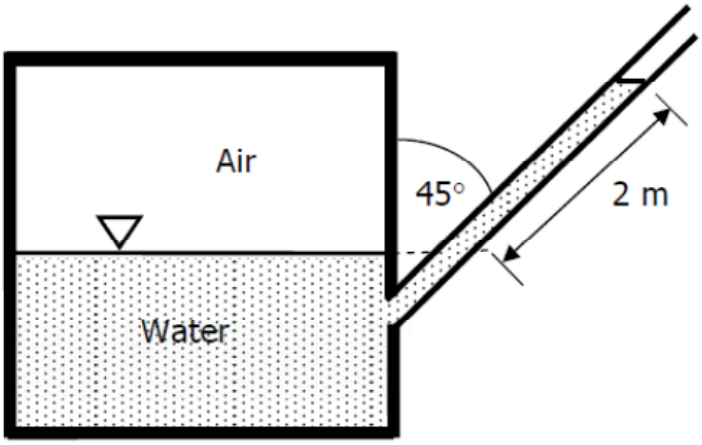

   (a) 19,620 N/m2
   (b) 13,873 N/m2
   (c) 16,991 N/m2
   (d) Cannot be determined

10. A 1:20 scale river model is designed based on Froude number similarity. What is the prototype flow velocity which corresponds to a model measured velocity of 0.5 m/s? Given Froude number $F_r = \frac{V}{\sqrt{gL}}$

   (a) 10 m/s
   (b) 158.1 m/s
   (c) 2.24 m/s
   (d) None of the above

Questions From Past Year Papers for Fundamentals Of Engineering Examination Part 2 (Civil)

(Actual paper comprises 9 questions. Answer 5 questions)

Q1.

To facilitate excavation for a new underground MRT station, a steel strutting and waling system together with concrete diaphragm wall are to be used for its construction. The designed strut force to be transmitted to the concrete wall is 3500 kN as shown in Figure Q1.

(a) Calculate the bearing and buckling resistances of the unstiffened web of the waler in the strut-waler connection. The sizes of the strut and waler as well as the strut-waler connection details are indicated clearly in the figure.
(10 marks)

(b) Determine whether the unstiffened web of the waler is adequate to transfer the design strut force or not. Propose an effective strengthening scheme if it is inadequate. Detailed design of the strengthening scheme is not required.
(10 marks)

You may assume that the strut is not at the end or near the end of the waler. State clearly your other design assumptions, if any.

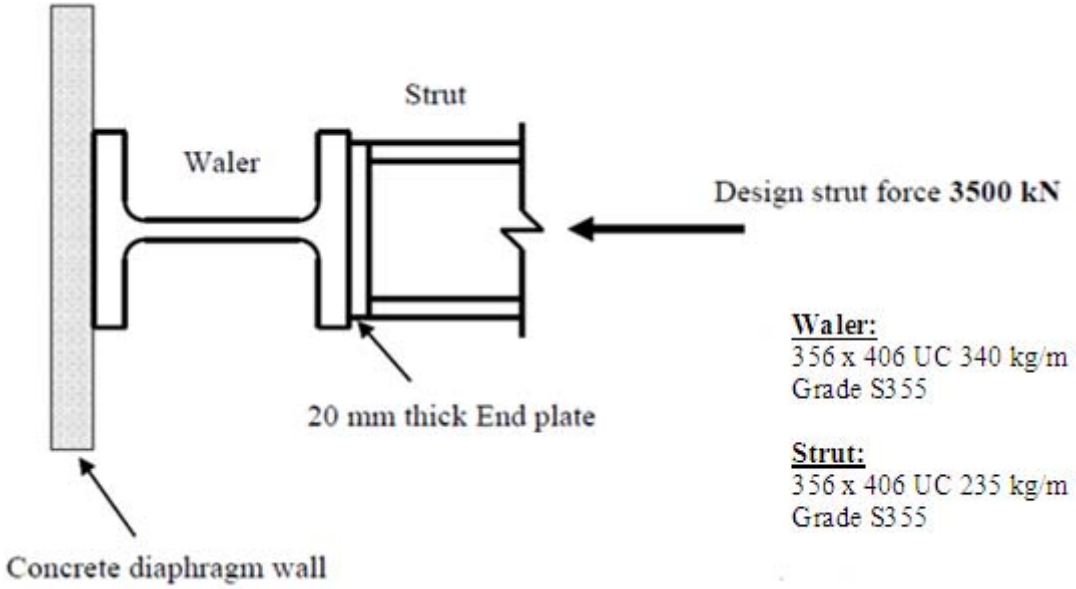

Figure Q1

Q2.

Figure Q2 shows part of a concrete floor supported by columns. The building is braced in two orthogonal directions. The clear storey height is 4 m and the effective length factor is 0.85. The interior column at A carries an ultimate axial load of 3200 kN from the beams which are symmetrically arranged. The exterior column at B carries an ultimate axial load of 1700 kN and a moment M, transmitted from the beam spanning between AB. Use f_{cu} = 35 N/mm^2, f_y = 460 N/mm^2. Assume a 60 mm cover to the centroid of longitudinal reinforcement.

(a) Determine a square column section at A with a reinforcement ratio of about 0.02. Give your answer to the nearest 25 mm. Design the reinforcement and show the arrangement of bars and links on a sketch of the section.

(7 marks)

(b) Determine the design moment in column B from the simplified sub-frame in Figure Q2. The beam stiffness is 2 times of the column members. The ultimate design load on beam AB is 62 kN/m. Design the reinforcement and show the arrangement of bars and links on a sketch of the section.

What is the maximum clear storey height permitted without reduction of column strength for slenderness effects?

(13 marks)

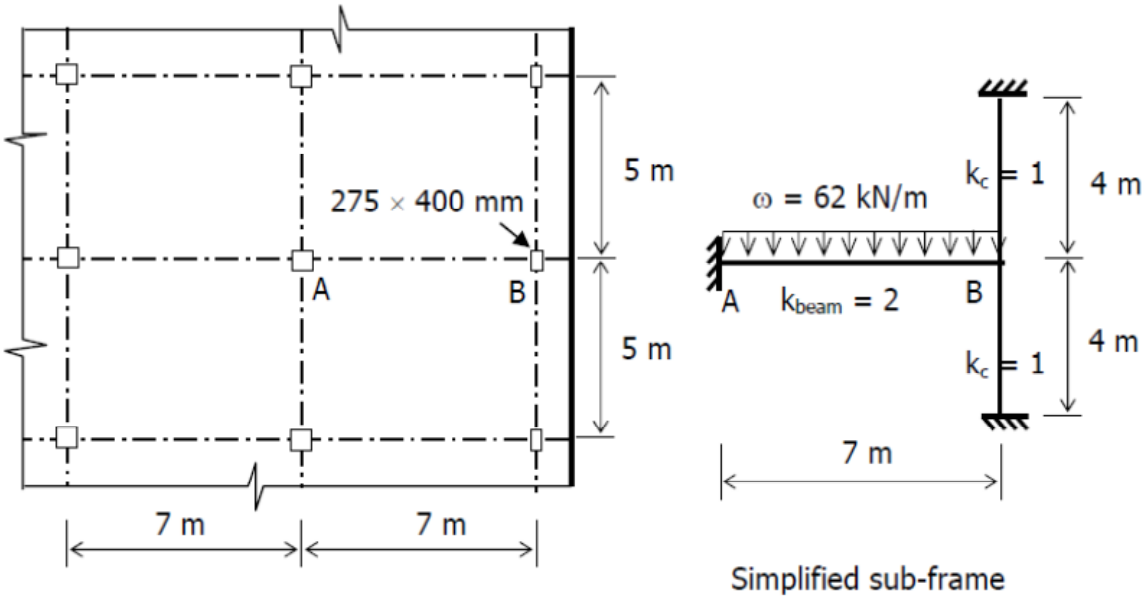

Figure Q2

Q3.
A proposed commercial development comprising a 30-storey tower block and a 6-storey podium block will be built on a site adjacent to an elevated MRT station and viaduct supported on pile foundations and low rise shop-houses on bakau piles. There is no basement planned for this development.

The subsoil conditions from preliminary site investigations are shown in Figure Q3(a). Groundwater table was observed about 1m below the existing ground level.

(a) Evaluate the feasibility of bored piles and driven RC piles for the proposed development, and recommend the most appropriate pile foundation system. Suggest measures to mitigate some of the construction problems you may encounter at the site in view of the proximity to sensitive structures.

(12 marks)

(b) For the plot of effective overburden pressure, p_o', and preconsolidation pressure, p_c' , shown in Figure Q3(b), evaluate the degree of consolidation of the marine clay layer under the existing ground conditions, and state whether negative skin friction will act along the pile shaft. Without going into calculations, suggest a penetration depth for your recommended pile foundation system at BH1 and sketch the distribution of axial load along pile shaft.

(8 marks)

Q3. *(Cont'd)*

Design Information Sheet for Q3

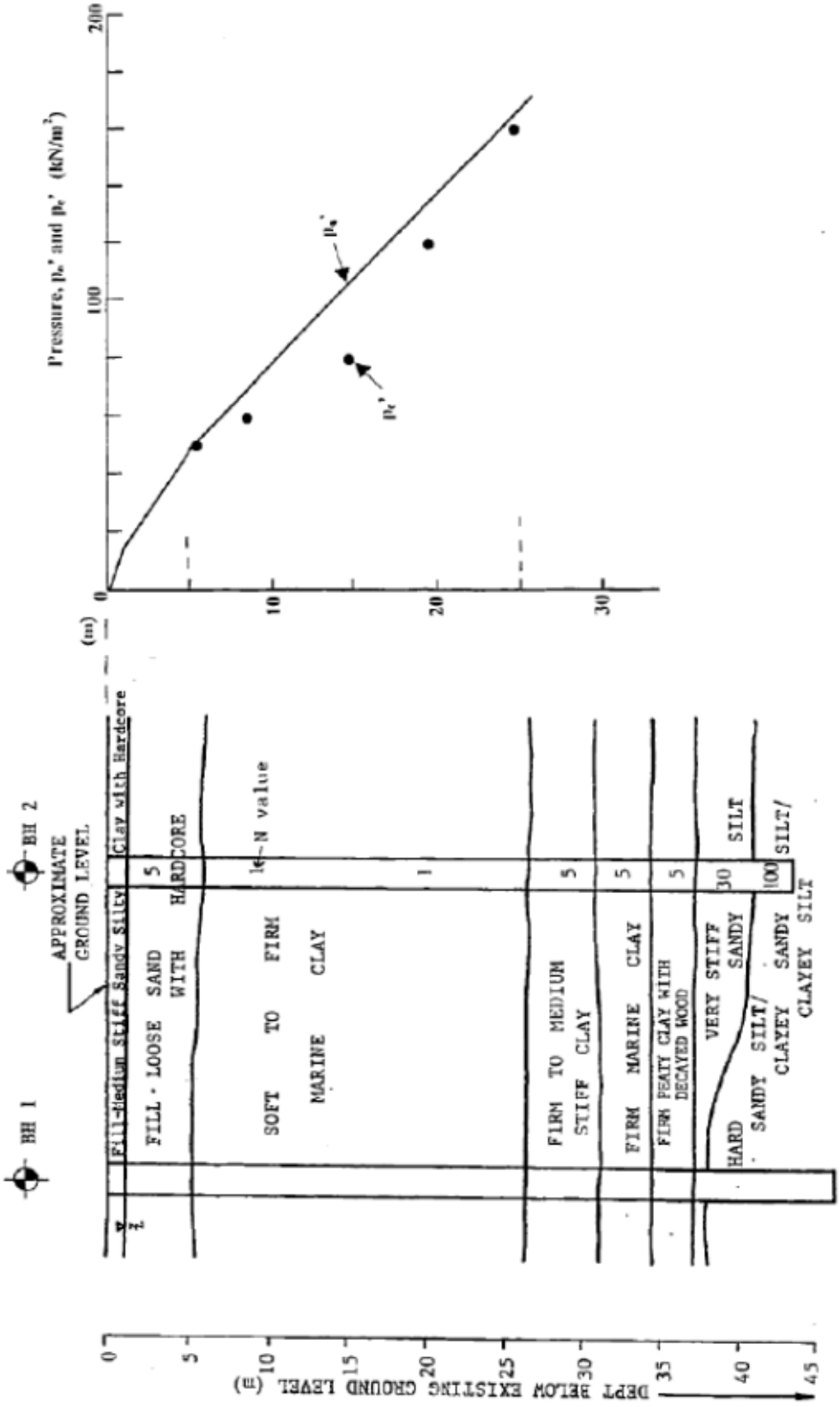

Figure Q3(a) Simplified soil profile

Figure Q3(b) Effective overburden pressure and preconsolidation pressure versus depth

Q4.

(a) A pair of <u>vertical</u> curves are to connect a series of tangent grades for which the slopes are shown in Figure Q4. The middle section is 150 metres long.

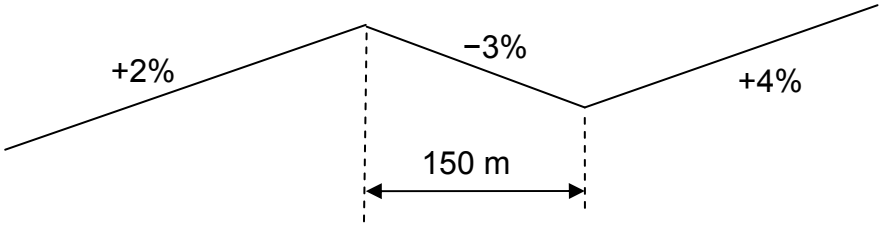

Figure Q4

The following information is provided for design calculation.

Driver reaction time: 2.5 seconds
Driver eye height: 1.050 metres
Tyre-pavement friction coefficient: 0.30
Object height for stopping: 0.150 metres
Road design speed: 70 km/h

(i) The required minimum stopping sight distance for motorists is found to be 120.0 metres on the crest curve, and 122.7 metres on the sag curve. Show how the value for the minimum stopping sight distance is obtained for either the crest curve or the sag curve.

(ii) Calculate the minimum length of the crest curve, and the sag curve, that satisfies the respective minimum stopping sight distance. Hence, show that the middle section is too short for the pair of vertical curves to be fully developed.

(10 marks)

(b) A 3-layer flexible pavement is to be constructed using materials with properties given in the following table.

Material	**Drainage coefficient** (*m's*)	**Layer coefficient** (*a's*)	**SN value above layer** (from AASHTO charts)
Asphalt concrete	impermeable	0.45	not applicable
Granite aggregate	1.20	0.20	2.3
Sandy gravel	1.10	0.12	3.3
Roadbed soil	0.60	0.05	4.3

(i) Compute the thickness of each layer in the flexible pavement.

(ii) List several advantages of a flexible pavement design over that of a rigid pavement.

(10 marks)

Q4. *(Cont'd)*

LIST OF FORMULAE

Reaction Distance, d_r:

$$d_r = vt_r$$

Braking Distance, d_b:

$$d_b = \frac{v^2}{2g(f \pm G)}$$

Minimum Length (Crest Curve), L_{min}:

$$L_{min} = \begin{cases} \dfrac{AS^2}{200\left(\sqrt{h_1} + \sqrt{h_2}\right)^2} & \text{When } S \le L \\ 2S - \dfrac{200\left(\sqrt{h_1} + \sqrt{h_2}\right)^2}{A} & \text{When } S > L \end{cases}$$

Minimum Length (Sag Curve), L_{min}:

$$L_{min} = \begin{cases} \dfrac{AS^2}{200\left[0.6 + S\left(\tan 1^\circ\right)\right]} = \dfrac{AS^2}{120 + 3.5S} & \text{When} S \le L \\ 2S - \dfrac{200\left[0.6 + S\left(\tan 1^\circ\right)\right]}{A} = 2S - \dfrac{120 + 3.5S}{A} & \text{When} S > L \end{cases}$$

AASHTO Structural Number (SN) Equation:

$$SN = a_1D_1 + a_2D_2m_2 + a_3D_3m_3 + \ldots$$

II Fundamentals Of Engineering Examination (Electrical)

The examination will focus on testing the fundamentals of electrical power engineering. The 6-hour examination will comprise two parts.

Format

- **FEE Part 1 (Electrical) (3 hours & 10 mins) - 40 MCQ questions**
  - EE 101 Principles of Power Engineering
- **FEE Part 2 (Electrical) (3 hours & 10 mins) - 5 out of 7 questions**
  - EE 201 Power System Analysis and Utilization

Syllabus

- **EE 101 Principles of Power Engineering**
  - **Three-phase Circuits and Systems**
    Review of single-phase circuits. Three-phase voltage generation. Phasor diagrams. Wye and delta connections. Balanced three-phase loads. Active, reactive and apparent power. Power measurements. Power factor correction.
  - **Magnetism and Magnetic Circuits**
    Magnetic fields. Magnetic materials and magnetization curves. Magnetic equivalent circuits. Electromagnetic induction. Sinusoidal excitation. Magnetic losses.
  - **Transformers**
    Ideal transformer. Equivalent circuits. Phasor diagrams. Determination of parameters. Performance evaluation. Autotransformers. Three-phase transformers.
  - **AC and DC Machines**
    DC Machines: operating principle, voltage and torque equations, classification, torque-speed characteristics, losses and efficiency. Three-phase induction motors: operating principle, equivalent circuit, torque-speed characteristics, losses and efficiency.
  - **Power Electronics and Drives**
    Introduction to power conversion. Harmonics. AC to DC conversion. DC to DC conversion. DC to AC conversion. DC servo motor drive systems. AC variable-speed induction motor drive systems. Permanent magnet and stepping motor drive systems.

- **Fundamental of Power System**
  Energy sources. Per unit system. Power system components and representation: synchronous generators, transmission lines and cables. Load representations. Power transfer.

- **Power Flow Modelling**
  System components modelling. Formulation of power flow equations. Methods of power flow solution. Case studies.

- **EE 201 Power System Analysis and Utilizations**

  - **Active Power and Frequency Control**
    Governor control systems. Area control errors and load frequency control. Energy offers. Transmission losses, penalty factors and loss coefficients. Economic dispatch. Automatic generation control. Electricity market environment. Active power control devices.

  - **Reactive Power and Voltage Control**
    Production and absorption of reactive power. Methods of voltage control. Reactive power and voltage control devices. Application to transmission and distribution systems.

  - **Analysis of Unsymmetrical Faults**
    Three-phase faults and fault level calculations. Symmetrical components. Sequence impedances and sequence networks. Unsymmetrical faults.

  - **Electric Power Distribution Systems**
    Distribution system configurations. Primary and secondary distribution. Ring, radial and inter-connected systems. Distribution substation layout. Planning criteria and network design. Fault diagnosis and restoration of supply. Expert system applications.

  - **Building Services Engineering**
    Estimation of power demand. LV cables and busway systems. Conductor sizing factors. Circuit protective conductor. Earth leakage and touch voltage. Inspection and testing. Lightning protection.

  - **General Protection Principles**
    Basic protection principles Instrument transformers. Coordination of overcurrent and earth protection for distribution systems. Pilot-wire differential protection of feeders.

  - **Applications of High-voltage Engineering**
    Acceptance and routine tests on apparatus. Fault locating methods. Condition monitoring and aging assessment. Case studies.

Recommended Reading List for Electrical Engineering

FEE Part 1 (Electrical)

EE 101 Principles of Power Engineering

1) Guru Bhag S and Hiziroglu Huseyin R, Electric Machinery and Transformers, 3rd Edition, Oxford, University Press, 2001.

2) Sen Paresh Chandra, Principles of Electric Machines and Power Electronics, 2nd Edition, John Wiley, 1997.

3) Chapman Stephen J, Electric Machinery and Power System Fundamentals, 1st Edition, McGraw-Hill, 2002.

4) Wildi Theodore, Electrical Machines, Drives and Power Systems, 6th Edition, Pearson/Prentice-Hall, 2006.

FEE Part 2 (Electrical)

EE 201 Power System Analysis and Utilizations

1) Grainger John J and Stevenson William D, Power System Analysis, McGraw-Hill, 1994.

2) Bergen Arthur R and Vittal Vijay, Power System Analysis, 2nd Edition, Prentice-Hall, 2000.

3) Weedy Birron Mathew and Cory Brian John, Electric Power Systems, 4th Edition, John Wiley, 1998.

4) Pabla A S, Electric Power Distribution, 5th Edition, McGraw-Hill, 2005.

5) Code of Practice for Electrical Installations, (Singapore Standards, CP5 1998), Singapore Productivity and Standards Board, 1998.

6) Lakervi Erkki and Holmes E J, Electricity Distribution Network Design, (IEE Power Engineering Series), 2nd Edition, Peter Peregrinus, 1995.

7) Haddad A and Warne D F, Advances in High Voltage Engineering, IEE (IEE Power and Energy Series), 2004.

8) Gers Juan M, Protection of Electricity Distribution Networks, 2nd Edition, Institution of Electrical Engineers, 2004.

9) Naidu M S and Kamaraju V, High Voltage Engineering, 2nd Edition, McGraw-Hill, 1996.

10) Ram Badri and Vishwakarma D N, Power System Protection and Switchgear, 2nd Edition, McGraw-Hill, 1997.

11) Teo Cheng Yu, Principles and Design of Low Voltage Systems, Revised 2nd Edition, seventh print, Byte Power Publications, 2012.

Questions From Past Year Papers for Fundamentals Of Engineering Examination Part 1 (Electrical)

(Actual paper comprises 40 Multiple Choice Questions (MCQ) of 2.5 marks each. Answer all questions.)

1. A three-phase 400-volt source supplies two parallel loads. Load 1 is rated 300 kVA, pf = 0.8 lagging and Load 2 is rated 240 kVA, pf = 0.6 leading. Determine the source line current I_a.

   (a) 646.1 A
   (b) 107.8 A
   (c) 554.5 A
   (d) 201.5 A

2. An ideal single-phase transformer has N_1 = 100 turns, and N_2 = 300 turns. The LV winding is connected to a voltage source operating at 3 kV. An impedance of value Z_2 = 100 + j30 Ω is connected across the HV side of the transformer. Compute the transformed power.

   (a) P = 743.1 kW, Q = 222.9 kVar
   (b) P = 700.1 kW, Q = 210.7 kVar
   (c) P = 690.9 kW, Q = 211.6 kVar
   (d) P = 722.4 kW, Q = 231.4 kVar

3. An open-circuit test is performed on a single-phase 440-V transformer winding. The results are P_{in} = 100 W, I_{in} = 1 A and V_{in} = 440 V. Determine the values of the shunt resistance (R_m) and magnetizing reactance (X_m).

   (a) Rm = 2116 Ω, Xm = 729.9 Ω
   (b) Rm = 5290 Ω, Xm = 137.2 Ω
   (c) Rm = 2116 Ω, Xm = 137.2 Ω
   (d) Rm = 1936 Ω, Xm = 451.8 Ω

4. A 500-kVA single-phase transformer is rated 6.8 kV/115 kV. A short circuit test on the high-voltage side at rated current indicates P_{in} = 435 W and V_{in} = 2.5 kV. Determine the winding resistance (R_s) and leakage reactance (X_s) on the high-voltage side.

   (a) R_s = 14.25 Ω, X_s = 574.5 Ω
   (b) Rs = 13.05 Ω, Xs = 312.5 Ω
   (c) Rs = 23.01 Ω, Xs = 312.5 Ω
   (d) Rs = 23.01 Ω, Xs = 574.5 Ω

5. A 25-kW, 250-V d.c. shunt generator has armature and field resistances of 0.06 ohms and 100 ohm respectively. The total armature power developed when working as a motor taking 25 kW input equals:

   (a) 26.25 kW
   (b) 23.8 kW
   (c) 25 kW
   (d) 24.4 kW

6. A 460-V series motor runs at 500 rpm taking a current of 40 A. The total resistance of the armature and field is 0.8 ohm. Assuming flux is proportional to the field current, the percentage change in torque when the load is reduced with the motor taking 30 A now can be calculated to be:

   (a) 50%
   (b) 75%
   (c) 43.75 %
   (d) 56.25 %

7. Two generators are supplying a real load of 2.5MW at 0.8 power factor lagging. Generator 1 has a no-load frequency of 51.5 Hz and a slope of the generator's characteristic of 1MW/Hz. While Generator 2 has a no-load frequency of 51 Hz and a slope of the generator's characteristic of 1MW/Hz. How much power is supplied by each of the two generators?

   (a) 1 MW; 1.5 MW
   (b) 1.5 MW; 1 MW
   (c) 1.25 MW; 1.25 MW
   (d) 2 MW; 0.5 MW

8. The conditions for the parallel operation of synchronous generators require the following parameters:

   (a) Line current, phase sequence, frequency, phase angle
   (b) Frequency, line voltage, phase sequence, phase current
   (c) Phase sequence, frequency, phase angle, line voltage
   (d) Power rating, phase sequence, frequency, impedance

9. The intake supply to an industrial plant Fuji is fed by one 22-kV feeder from node SPG which is connected to an equivalent utility system PSO as shown in Figure: Q9-Q10. The load at PSO is 24 MW and 12 Mvar, at SPG is 6 MW and 4 Mvar and at node FPP is 5 MW and 3.3 Mvar. There is no load at all other nodes. The 22-kV network at Fuji is also step down to 3.3 kV at nodes G3.3 and EG1 with the local generator at node EG1 generating at 4 MW at a power factor of 0.94 lag synchronizing to PSO. The line flow at sending end and receiving end of each circuit is shown in MW and Mvar with positive sign indicating that the MW is injected to the node, and negative sign as the MW is outgoing from the node listed in Figure: Q9-Q10 below.

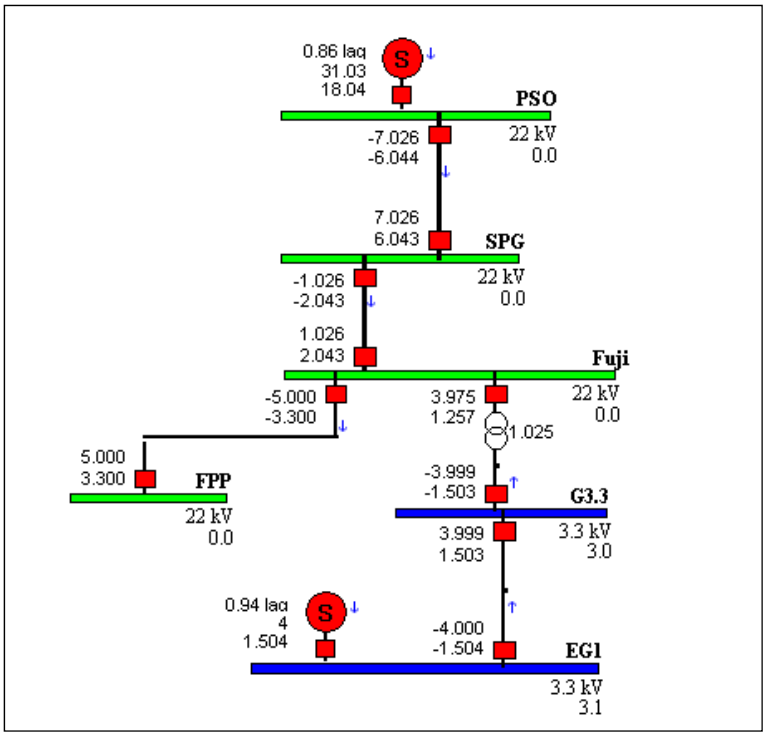

Figure: Q9-Q10

In the system above as shown in Figure: Q9-Q10, the power factor at Fuji intake is below 0.85. If the output of the local generator is still kept at 4 MW and the power factor at the Fuji intake has to be above 0.85, the plant operator should:

(a) reduce the operating voltage at EG1
(b) increase the frequency of the local generator
(c) reduce the frequency of the local generator
(d) increase the operating voltage at EG1

10. In the same system above as shown in Figure: Q9-Q10, it is assumed that the local generator is operated at the maximum output of 8 MW at a power factor of 0.88 lag. However, the frequency in the industrial plant Fuji is reducing from 50 Hz to 49 Hz. To improve the frequency from 49 Hz to 50 Hz, the plant operator should:

    (a) adjust the tap changer of the 22/3.3 kV transformer
    (b) adjust the power factor of the local generator
    (c) turn on appropriate number of capacitors in the plant
    (d) take no action

Questions From Past Year Papers for Fundamentals Of Engineering Examination Part 2 (Electrical)

(Actual paper comprises 7 questions. Answer 5 questions)

Q1.

Two generators operating in parallel supply a load of 5 MW at 0.9 lagging power factor. Gen A has a slope of 5 MW/Hz and Gen B 4 MW/Hz and their no-load frequency settings are 50.4 Hz and 51 Hz respectively.

(a) Find the system frequency and MW supplied by each generator.

(13 marks)

(b) Find the reactive power supplied by Gen A if the power factor of Gen B is 0.8 lagging.

(7 marks)

Q2.

The post fault 22 kV network is shown in Figure Q2a. The network is only protected by overcurrent relay and the 8 tripped breakers activated by overcurrent relays are shown in white rectangles in Figure Q2a. The overcurrent relay settings for each feeder are shown in Table Q2a, and the load at each node in Table Q2b.

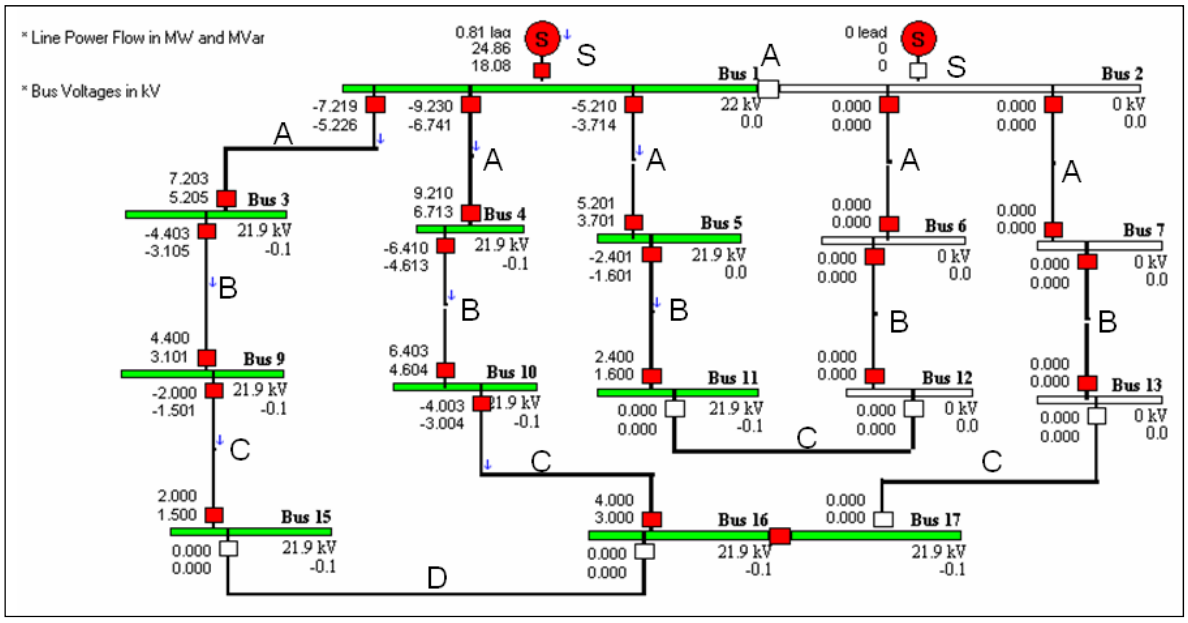

Figure Q2a

Table Q2a

Type	CT ratio	PS	TMS
S	2000/5	100%	0.4
A	300/5	200%	0.5
B	300/5	200%	0.3
C	300/5	200%	0.2
D	300/5	200%	0.1

Table Q2b

Bus ID	Load (MW, Mvar)
Bus1, Bus2	3.2, 2.4
Bus3, Bus4, Bus5, Bus6, Bus7	2.8, 2.1
Bus9, Bus10, Bus11, Bus12, Bus13	2.4, 1.6
Bus15, Bus16, Bus17	2.0, 1.5

(a) Identify the possible fault location. Give reasons to support your fault diagnose inference.

(10 marks)

(b) The fault is subsequently cleared and supply has been all restored. However, on the next day, all breakers connected to Bus1 failed and cannot be closed as shown in Figure Q2b. As a result the feeder from Bus2 to Bus7 tripped resulting in a loss of supply to Bus1, Bus3, Bus4, Bus7, Bus9, Bus10, Bus13, Bus15, Bus16 and Bus17. List the appropriate switching steps so that supply to all nodes can be fully restored, or to as many nodes as possible. Determine the two highest-loading circuits in amperes and also nodes that supply cannot be restored if any.

(10 marks)

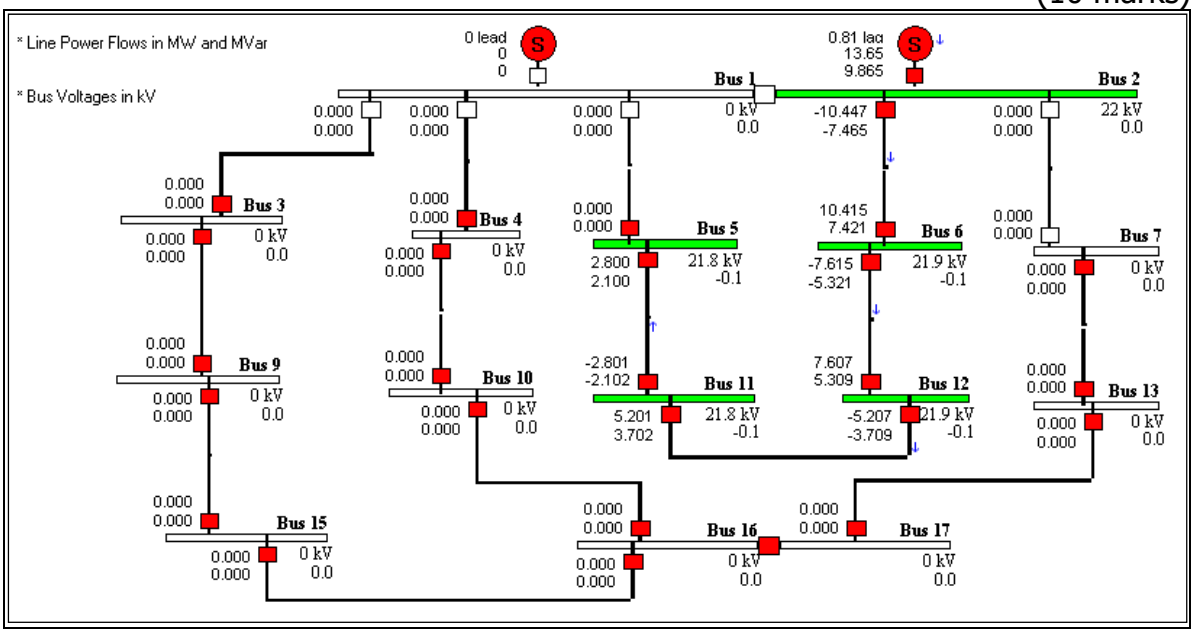

Figure Q2b

Q3.

Figure Q3 shows an incomplete schematic diagram of a protection arrangement for a 115/13.2 kV Dy1 power transformer. The transformer is rated at 25 MVA. Current transformers (CT) ratio is 150/5 A on the 115 kV side and 2250/5 A on the 13.2 kV side.

(a) Complete the three-phase wiring connection from current tranformers to the differential relay. Indicate on your completed schematic diagram the current distribution (both magnitude and direction of flow) on the power transformer and in the relay circuit.

(14 marks)

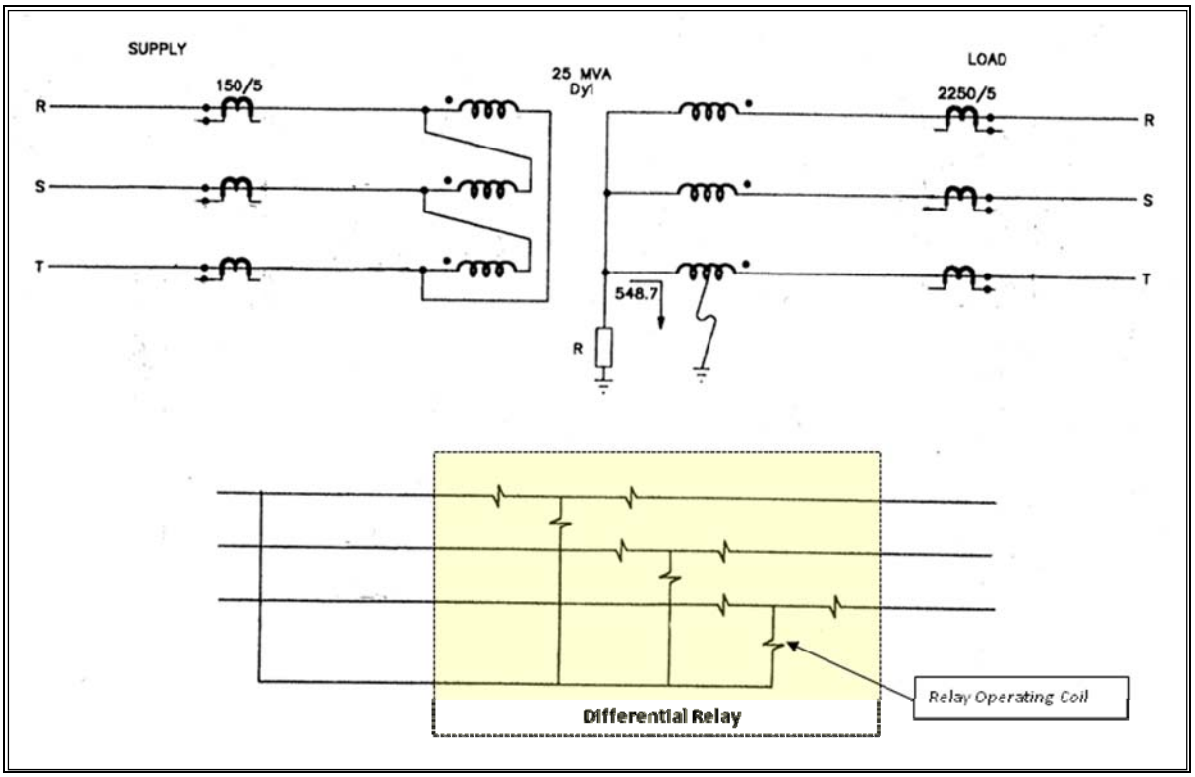

Figure Q3: Incomplete Schematic of a Differential Protection

(b) A single-phase to earth fault at the middle of the LV winding as indicated in Figure Q3 has resulted in a fault current of 548.7 A. The differential relay is set to operate at 5% of the CT rating. Calculate whether this earth fault could cause the relay to operate. State any assumptions made.

(6 marks)

III Fundamentals Of Engineering Examination (Mechanical)

The examination will focus on testing the fundamentals of mechanical engineering. The 6-hour examination will comprise two parts:

Format

- **FEE Part 1 (Mechanical) (3 hours & 10 mins) – 40 MCQ questions**
  - ME 101 Control and Instrumentations
  - ME 102 Dynamics and Vibrations
  - ME 103 Fluid Mechanics
  - ME 104 Mechanics and Materials
  - ME 105 Manufacturing Technology
  - ME 106 Thermodynamics and Heat Transfer

- **FEE Part 2 (Mechanical) (3 hours & 10 mins) – 5 out of 7 questions**
  - ME 201 Control and Instrumentations
  - ME 202 Dynamics and Vibrations
  - ME 203 Fluid Mechanics
  - ME 204 Mechanics and Materials
  - ME 205 Manufacturing Technology
  - ME 206 Thermodynamics and Heat Transfer

Syllabus

- **ME 101/201 Control And Instrumentations**
  - **Modelling of Linear Systems**
    Introduction to control systems. Mathematical modelling of electro-mechanical systems. Transfer functions representation of physical components. Block diagram manipulation.
  - **Dynamic Response Analysis**
    Transient response analysis and performance indices. Poles and zeros concept, dominant pole concept of high order systems. Characteristic equation. Steady state errors and system types.
  - **Principles of Feedback Control**
    Open loop versus closed loop control. Analysis of system type. Error elimination and disturbance rejection. Types of feedback systems. PID controller. Stability and Routh-Hurwitz method.
  - **Root Locus Techniques**
    Qualitative analysis of the Root Locus. Guidelines for sketching a Root Locus. General concepts of dynamics compensator

design. Design by Root Locus: PI, PD, PID, Lead and Lag compensators. Feedback compensation and realisation.

- **Frequency Domain Analysis**
  Concept of frequency response. Bode plots. Nyquist plot and Nyquist stability criterion. Stability margins. Closed loop frequency domain characteristics. Design of compensator via Bode plots - Lead, Lag & Lag-lead controller. Design examples.

- **Measurement System**
  Models and classification for measurement systems and their time and frequency domain behaviours. Performance specifications.

- **Analog Devices and Measurement**
  Introduction to basic measurement devices for analog signals and measurement principles. Conditioning of analog signals for transmission and processing.

- **Digital Devices and Measurement**
  Fundamental differences between analog and digital systems. Sampling theorem and fundamentals of data acquisition.

- **Sensors**
  Measurement for common engineering applications: position, speed, stress, strain, temperature, vibration and acceleration, pressure and flow. Semiconductor sensors and micromechanical devices.

- **ME 102/202 Dynamics And Vibrations**

  - **Dynamics**

    Kinematics of Particle
    Uniform rectilinear motion; Uniform accelerated rectilinear motion; Rectangular components of velocity and acceleration; Motion relative to a frame in translation; Tangential and normal components; Radial and transverse components. Newton's second law; Equations of motion; Angular momentum of a particle; Principle of conservation of energy; Principle of conservation of momentum.

    Kinematics of Rigid Bodies
    General plane motion; Coriolis acceleration. Equations of plane motion for a rigid body; Angular momentum of a rigid body in plane motion; Principle of work and energy for a rigid body; Principle of impulse and momentum for the plane motion of a rigid body; Conservation of angular momentum.

  - **Mechanical Vibrations**

    Vibration Without Damping

Simple harmonic motion; Energy method; forced vibration.

Damped Vibration
Damped free vibration; Damped forced vibration.

- **ME 103/203 Fluid Mechanics**

  - **Basic concepts**
    Understanding fluids as compared to solids and gases. Properties of fluids: Density, pressure and viscosity. Pressure measurements. Buoyant forces and Archimedes' Principle. Stability of submerged and floating bodies. Stability of a ship.

  - **Fluid Motion**
    Real and ideal fluids. Momentum and forces in fluid flow: Continuity equation, momentum equation, energy equation, Bernoulli's equation.

  - **Pipe Flow**
    Laminar and turbulent flows in pipes. Moody diagram, losses and fittings, energy equation for real laminar flow in pipes. Equation of motion for turbulent flow. Mixing length hypothesis. Fully turbulent flow in pipes. Head and flow calculations in pump-piping systems.

  - **Fluid Machinery**
    Fundamental theory and performance. Pumps and fans, turbines: Concepts and performance characteristics. Cavitation and surge phenomena.

  - **Flow Resistance and Propulsion**
    Boundary layer, surface roughness, form drag. Water jet theory: Basic principle, fundamental thrust equation. Ship propulsion: Introduction to propulsion system, powering of ship, propeller theory, propeller-hull interaction.

- **ME 104/204 Mechanics And Materials**

  - **Material properties and behaviour**

    Yield and ultimate tensile stress, proof stress, elastic modulus. Yield and Strength failure criteria- Tresca and Von-Mises.

    Temperature effects- temperature expansion coefficient, creep and stress relaxation. Post-yield effects- elastic-plastic, bilinear hardening and strain hardening. Fatigue effects- S/N curves.

  - **Stress and Strain**

Basic stress and strain for elastic bodies- direct stress and strain, shear stress and strain, Mohr's circle. Stress and Strain transformations - two and three-dimensional, 4 elastic constants E, ν, k and G.

- **Bending of beams**
  Second moments of area of structural sections, Free body, shear force and bending moment diagrams. Elastic and inelastic bending of beams. Combined tension and bending of beams, Deflection and slopes of beams. Shear stress in beams, Statically indeterminate beams.

- **Bending of plates and cylindrical shells**
  Symmetric membrane bending theory of circular plates and shells under fixed and freely supported boundaries. Discontinuity stresses of cylinder to flat, cone or hemispherical shells junctions.

- **Torsion of prismatic bars and closed sections**
  Torsion of circular solid section and open thin walled sections, shear stresses and deformation, shear flow in thin walled open and closed sections.

- **Buckling of columns**
  Euler buckling theory, perfect and imperfect columns, effect of end fixings on critical buckling loads.

- **Thermal loading**
  Thermal stresses in beams and cylinders due to a through thickness temperature gradient, thermal stresses in compound bars of different materials under uniform temperature.

- **Internal pressure loading**
  Membrane theory, thin and thick walled cylinders under pressure.

- **<u>ME 105/205 Manufacturing Technology</u>**

  - **Introduction**
    Cutting tool materials. Single and multi-point tools. Types of wear. Manufacturing processes: cold and hot working, rolling, extrusion, forging, sheet and metal blanking and forming, cold forming, welding, brazing, soldering, casting, powder metallurgy, plastics technology. Non-conventional machining: electro-discharge machining.

- **Metal Removal**
  Introduction to machine tools and machining operations – Generating motions of machine tools, machines using single point tools, machines using multipoint tools, machines using abrasive wheels. Mechanics of metal cutting – Chip formation, forces acting on the cutting tool and their measurement, the apparent mean shear strength of the work material, chip thickness, friction in metal cutting. Cutting tool materials – Major tool material types. Tool life and tool wear – Forms of wear in metal cutting. Economics of metal cutting operations – Choice of feed, speed and depth of cut, tool life for minimum cost and minimum production time, estimation of factors needed to determine optimum conditions.

- **Metrology**
  Basic measuring instruments and their applications (Linear and angular measurement, roundness, flatness and surface finish measurement).

- **Manufacturing Processes**
  Introduction to cold and hot working. Rolling - 2, 3 and 4-high rolls, cluster and planetary rolls, manufacture of blooms, billets and slabs. Extrusion - Direct and indirect extrusion, hollow extrusion, hydrostatic extrusion. Forging - Hammer, press, roll forging, open and closed die forging. Sheet metal bending and deep-drawing, punch load, drawability, Crane's constants. Shearing of sheet metal - types of shearing operation, punch and die clearance, punch force. Cold forming processes - Marforming, Guerin process, hydroforming. Welding, brazing, soldering - Arc and gas welding, pressure welding, MIG, TIG, submerged-arc, friction, resistance, laser and electron-beam welding. Casting - Sand casting, patterns, defects, die-casting, centrifugal casting, investment casting, continuous casting. Powder metallurgy - Production of powders, fabrication processes, sintering, comparison with other processes. Electro-discharge machining. Plastics technology – Properties of plastics, thermoplastics and thermosets, manufacturing of plastics.

- **<u>ME 106/206 Thermodynamics And Heat Transfer</u>**

  - **Thermodynamics**

    Fundamental concepts
    Simple concept of thermodynamic system. Types of energy interaction between system and surroundings. Properties of simple pure substances –understand the general form of property diagrams. Empirical temperature scales and thermometry. Ideal and perfect gases. Use of steam tables for substance such as water.

First Law of Thermodynamics

The concept of fully-resisted or quasi-static processes; work and heat interactions in adiabatic boundaries with the introduction of internal energy, kinetic, potential and enthalpy. Statement of the First law of Thermodynamics: applications relating to non-flow and simple unsteady flow (e.g., the filing of a rigid vessel) processes. First law applied to simple thermodynamic plants, e.g. power plant, compressors and expanders (without detailed knowledge of plant construction). Steady flow energy equation and its application to demonstrate the significant of enthalpy changes.

Second Law of Thermodynamics

Alternative statements of the Second Law. Reversible and irreversible processes. Internal and external irreversibility. Heat engines operating in temperature reservoirs and the efficiency of reversible engines. Entropy as a property and its relationship to heat transfer. The Clausius inequality. Isentropic and non-isentropic processes.

- **Heat Transfer**

Conduction

Heat transfer by conduction. Steady-state conduction through slab, compound walls, cylinders and spheres. Unsteady state conduction in homogeneous solids.

Convection

Heat Transfer by convection, in fluids and films. Overall heat transfer coefficients. Natural and forced convection on plane surfaces, fins, pipes and around round bundles. Heat transfer in extended surfaces- combining conduction and convection.

Radiation

Heat transfer by radiation. Laws of radiant heat transfer, black and gray bodies, geometric factors, absorptivity.

Questions From Past Year Papers for Fundamentals Of Engineering Examination Part 1 (Mechanical)

(Actual paper comprises 40 Multiple Choice Questions (MCQ) of 2.5 marks each. Answer all questions.)

1. A rectangular wooden fin of cross section 200 mm by 600 mm protrudes from the bottom of a motor boat moving at 5 m/s. What is the maximum pressure on the fin? Density of water is 1000 kg/m^3.

   (a) 2.50 kPa
   (b) 5.00 kPa
   (c) 12,50 kPa
   (d) 25.00 kPa

2. A pump is required to deliver 0.5 m^3/s of cooling water through a pipe of 75-mm diameter to a heat engine which is 200 m away from and 2 m higher than the pump. Density of water is 1000 kg/m^3. What is the power of the pump?

   (a) 1000 W
   (b) 4905 W
   (c) 9810 W
   (d) 19620 W

3. The main reason for incorporating an air pre-heater in the furnace of a steam power plant is

   (a) to have a complete combustion in the furnace
   (b) to decrease the humidity of air in the exhaust flue gases
   (c) to minimize the energy input to the combustion process
   (d) to maximize the waste heat rejection in the exhaust

4. In a stoichiometric combustion, the air to fuel ratio is

   (a) below the user defined value
   (b) higher than its natural ability to burn
   (c) the chemically correct value
   (d) a burning scenario when the flame is seen to be yellow in colour

5. The coefficient of performance (COP) of a vapour compression chiller is characterized by its cooling capacity. At low cooling rates, the chiller COP is reduced by the effects of heat leaks to the environment. On the other hand, at high cooling rates, the chiller suffers from

   (a) the high vibration of the major moving parts
   (b) the inefficient operation of the expansion device
   (c) the high mass leaks in the vapour compression machine
   (d) the finite-rate of heat transfer and fluid friction losses of the working fluid

6. Which of the following statement is correct?

   (a) Tool life increases with the increase of cutting speed
   (b) Tool life decreases with the increase of cutting speed
   (c) Cutting speed has no influence on tool life
   (d) None of the above

7. Consider the unity-feedback control system with the following open-loop transfer function:

$$G(s) = \frac{10}{s(s-1)(2s+3)}$$

   It is:
   (a) stable
   (b) unstable
   (c) marginally stable
   (d) conditionally stable

8. Referring to the system shown below, determine the values of K and k such that the system has a damping ratio ζ of 0.7 and an undamped natural frequency ω of 4 rad/sec.

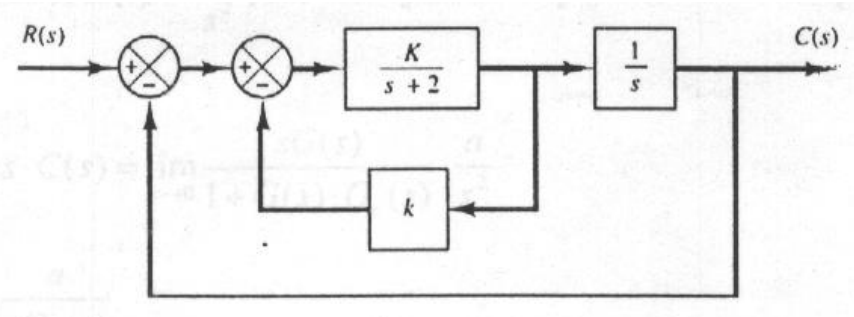

   (a) 16, 0.225
   (b) 4, 0.225
   (c) 16, 0.05
   (d) None of the above

9. Design a solid shaft to transmit 200 KW at 75 rpm without exceeding a shearing stress of 43 MPa.

   (a) 54.8mm
   (b) 72mm
   (c) 0.144mm
   (d) 144mm

10. A beam having a rectangular section of 100mm width by 150mm depth is subjected to a positive bending moment of 16 KNm acting about the horizontal axis. Find the bending stress acting at the section 25mm above the neutral axis.

   (a) 114.22 MPa
   (b) 72.11 MPa
   (c) 0.114 MPa
   (d) 28.44 MPa

Questions From Past Year Papers for Fundamentals Of Engineering Examination Part 2 (Mechanical)

(Actual paper comprises 7 questions. Answer 5 questions.)

Q1.

A combined cycle power plant comprises a natural gas fired, ideal gas-turbine topping cycle and a bottoming steam-generator for the steam turbine. The air inlet pressure and temperature to the gas turbine, which has a pressure compression ratio of 8, are 1 bar and 300K, respectively. The temperature of burned gases from the combustor to the turbines is 1400K and the flue gas temperature leaving the steam generator (heat exchanger) is 520K. The bottoming cycle of the power plant is an ideal reheat Rankine cycle where the steam pressure and temperature supplied to the high pressure steam turbines are 150 bar and 450 C. Additional natural gas is fired for the reheating of steam and the conditions of reheated steam supplied to low-pressure turbine stage are 30 bar and 500° C, respectively.

(a) For the stated steady state conditions, sketch the combined cycle on a T-s diagram.

(4 marks)

(b) Using the thermodynamic properties of air and steam from the Tables, determine;

(i) the mass flow rate of air in the gas turbine cycle if the steam generation rate is 30 kg/s,
(ii) the rate of total heat input, and
(iii) the thermal efficiency of the combined cycle.

State all assumption made in the solution.

(16 marks)

Q2.

A solid aluminium shaft 1.0m long and 50mm diameter is to be replaced by a tubular steel shaft of the same length and same outer diameter so that either shaft could carry the same torque and have the same angle of twist over the total length (that is having the same torsional stiffness).

Calculate the inner diameter of the tubular steel shaft.

The following properties of steel and aluminium can be used in your calculation. Steel, G_s= 84 GPa, Aluminium G_a= 28 GPa.).

(20 marks)

Q3.
A mercury-in-bulb thermometer is immersed into a bath of temperature T_i, and the mercury level in the stem of radius r_s rises by a finite height X_o. If the bulb has a radius r_b, and the overall heat transfer coefficient between the bulb and the fluid of the bath is U, show that the energy balance equation for the temperature of mercury in the bulb (T_b) is given by

$$\rho C V_b \left(\frac{dT_b}{dt}\right) = U A_b (T_i - T_b)$$

where ρ is the density of mercury in the bulb, C is the specific heat, A_b is the surface area of the bulb. Assuming that the expanded mercury of the bulb ($\beta V_b T$) is equal to the change of the mercury volume in the stem ($X_o A_s$), demonstrate that the output variable (X_o) to the input variable (T_i) can be expressed as

$$\left[\frac{\rho C V_b}{U A_b}\right]\left(\frac{dX_o}{dt}\right) + X_o = \left[\frac{\beta V_b}{A_S}\right] T_i$$

where A_s is the cross section area of the hollow stem of thermometer. Using the operator D or equivalent, demonstrate that the thermometer can be expressed as a 1st order transfer function in terms of X_o to T_i as;

$$(\tau D + 1) X_o = K\, T_i$$

Hence, show that $K = \frac{\beta V_b}{A_S}$, a constant and $\tau = \frac{\rho C V_b}{U A_b}$, is the time constant of the thermometer.

Write down the general solution of the output variable, X_o. Sketch the expected behavior of the thermometer over a finite non-dimensional time internals, t/τ, say from 0 to 5.

(12 marks)

A mercury-in-bulb master thermometer is designed with a bulb radius of 1.6 mm whilst the ratio of the hollow stem to bulb radii is 0.07. If the overall heat transfer coefficient between the thermometer and the bath fluid is 800 W/m^2.K, show that:

(i) the time constant (τ) of the thermometer is about 4 s,

(ii) the ratio of thermometer constant (K) to the volumetric expansion coefficient of mercury (β) is about 0.1.

The following properties of mercury can be used in your calculation: Density (ρ) and specific heat (C) of mercury are 13500 kg/m^3 and 140 J/kg.K, respectively.

(8 marks)